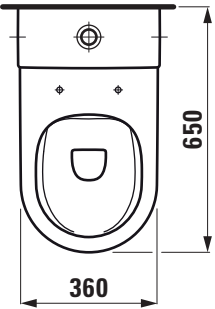

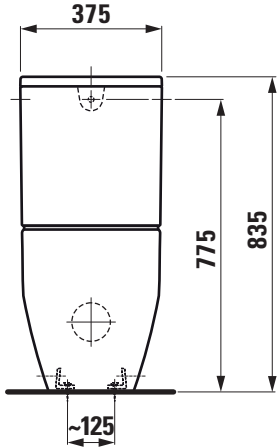

Charge 000

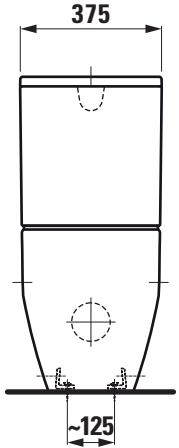

Charge 231

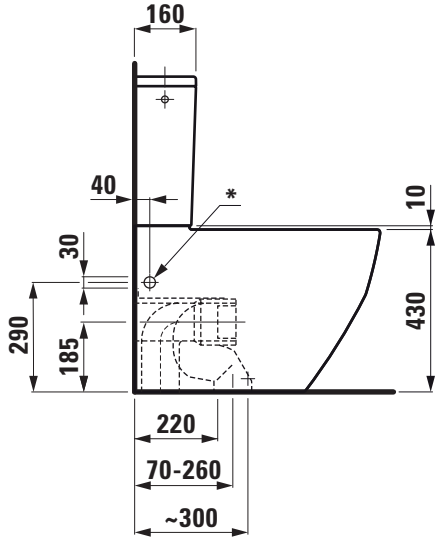

* = Only Charge 231 (Charge 000 without holes)