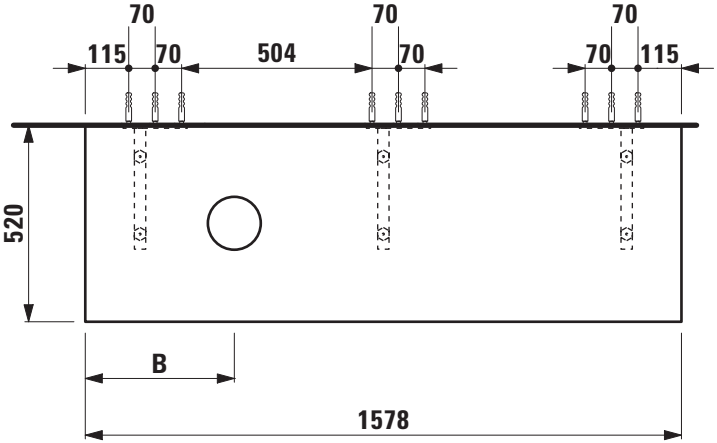

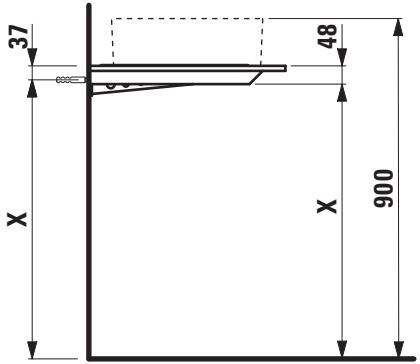

B / mm	Ceramic
300	Kartell by Laufen 81033.8, 81333.2
306	Palomba 81680.2
320	Kartell by Laufen 81033.4
345	Palomba 81680.3 Val 81228.1
394	Kartell by Laufen 81233.1 , 81533.1 Palomba 81180.1, 81280.1 Living Square 81143.3, 81143.4, 81143.5 Ino 81630.0, 81630.2, 81730.1 Val 81628.0, 81628.3, 81628.4 Val 81728.1 (only wall mounted tap)

B / mm	Ceramic
450	Ino 81730.2 (only wall mounted tap)
468	Kartell by Laufen 81033.5
498	VAL 81228.2
578	Kartell by Laufen 81233.2 (with tap bank right)
600	Kartell by Laufen 81033.9

X = The exact hight must be set during installation.